I N F O

INSTRUCTION BOOKLET

REFRIGERATOR **ER 6632 I**

2222747-43

Contents

Instructions for the user

Important Safety Instructions 3

Description of the Appliance 4

Operation 5
Before use 5
Setting the temperature 5
Fresh food refrigeration 5
The door shelves 5

Health and safety guidelines 6

Defrosting 7

Normal Operating Sounds 7

Maintenance and Cleaning 8
Internal cleaning 8
Changing the light bulb 8
When the appliance is not use 8

Something not Working? 9

Service and Spare Parts 10

Customer Care Department 10

Guarantee Conditions 11

Instructions for the installer

Technical specifications 14

Installation 14
Positioning 14

Electrical Connection 15

Instructions for totally built-in appliance 16

⚠ Important Safety Instructions

These warnings are provided in the interests of your safety. Ensure that you understand them all before installing or using this appliance. Your safety is of paramount importance. If you are unsure about any of the meanings of these warnings contact the Customer Care Departement.

Prior to Installation

- Check the appliance for transport damage. Under no circumstance should a damaged appliance be installed. In the event of damage please contact your retailer.

Installation

- This appliance is heavy. Care should be taken when moving it.
- It is dangerous to alter the specifications or attempt to modify this product in any way.
- Ensure that the appliance does not stand on the electrical supply cable. If the supply cable is damaged, it must be replaced by a cable available from your local Service Force Centre.
- Any electrical work required to install this appliance should be carried out by a qualified electrician or competent person.
- Parts which heat up should not be exposed. Whenever possible, the back of the appliance should be close to a wall, but leaving the required distance for ventilation, as stated in the installation instructions.
- The appliance should be left for 2 hours after installation before it is turned on, in order to allow the refrigerant to settle.

Refrigerant

- During transportation and installation of the appliance, be certain that none of the components of the refrigerant circuit become damaged.
- If the refrigerant circuit should become damaged:
  - avoid open flames and sources of ignition.
  - thoroughly ventilate the room in which the appliance is situated.

Child Safety

- Do not allow children to tamper with the controls or play with the product.
- There is a risk of suffocation! Keep packaging material away from children!

During Use

- This appliance is designed for domestic use only, specifically for the storage of edible foodstuffs only. It is not intended for commercial or industrial use.
- Containers with flammable gases or liquids can leak at low temperatures. Do not store any containers with flammable materials, such as spray cans, fire extinguisher refill cartridges etc. in the refrigerator.

Maintenance and Cleaning

- Before cleaning, always switch off the appliance and disconnect from the electrical supply.
- When unplugging always pull the plug from the mains socket, do not pull on the cable.

Servicing

- This product should be serviced by an authorised engineer and only genuine spare parts should be used.
- Under no circumstances should you attempt to repair the appliance yourself. Repairs carried out by inexperienced persons may cause injury or serious malfunctioning. Contact your local Service Force Centre.

At the end of the Appliance Life

- When disposing of your appliance use an authorised disposal site.
- Remove the plug and ensure that any locks or catches are removed, to prevent young children being trapped inside.

Description of the Appliance

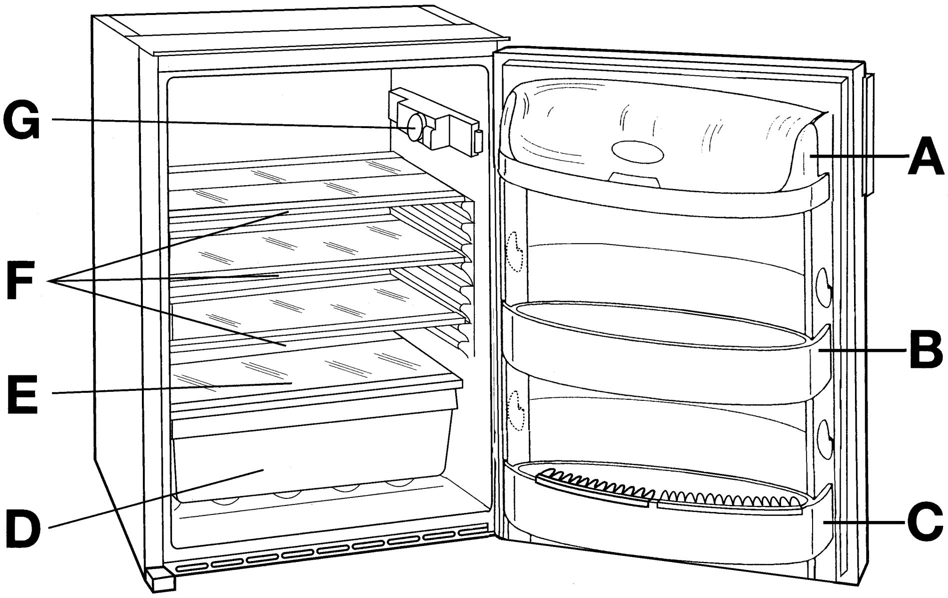

A - Dairy compartment
B - Can storage shelf with egg tray
C - Bottle storage shelf
D - Salad drawer
E - Glass shelf (for storing fresh meat)
F - Storage shelves
G -Thermostat control

Operation

Before use

Remove all securing tapes. Wash inside the appliance with lukewarm water and bicarbonate of soda
(5 ml to 0.5 litre of water). Do not use soap or detergent as the smell may linger. Dry thoroughly.

Setting the temperature

The temperature inside the refrigerator is regulated by a thermostat with 6 temperature positions and one «OFF» (O) position.

Position 1 = minimum coldness

Position 6 = maximum coldness

Turn the thermostat dial to the required position;
the intermediate position is usually the most suitable (3-4).
The thermostat setting can vary as the temperature inside the refrigeration compartment depends on the following factors:

- room temperature
- how often the door is opened
- how much food is stored
- position of the appliance

Important

If the fridge is not defrosting correctly, it is possible that because a very low tempera ture has been selected, the motor is working continuously, which prevents the defrost cycle from operating.
To ensure correct defrosting, a lower number should be selected on the thermostat and you should notice that the motor cuts out from time to time, which is correct.
If you wish to return to a lower temperature, turn the thermostat to a higher number, how ever you should turn the setting lower occa sionally to allow automatic defrosting.

Fresh food refrigeration

To obtain the best performance, do not store warm food or evaporating liquids in the refrigerator; do cover or wrap the food, particularly if it has a strong flavour.
Do not cover the shelves with any protective material, such as paper, cardboard or plastic, which may obstruct the air circulation through them.
To help you use your refrigerator correctly, here are some more useful hints:
Raw meat (beef, pork, lamb & wild fowl): wrap in polythene bags and place on top of the salad crisper.

Meat can only be stored safely in this way for one or two days at the most.

Fruit & vegetables: these should be thoroughly cleaned and placed in the bottom salad crisper.
Butter & cheese: these should be placed in special airtight containers or wrapped in aluminium foil or polythene bags to exclude as much air as possible.
Milk bottles: these should have a cap and should be stored in the bottle rack on the door.

The walls of the refrigerator are equipped with runners so that shelves can be positioned as desired.

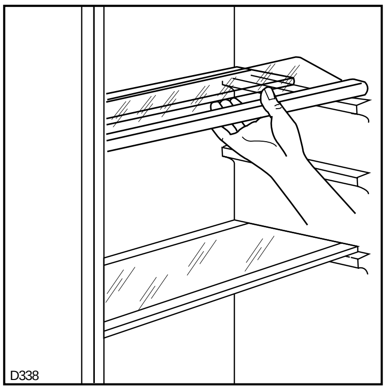

The door shelves

To permit storage of food packages of various sizes the central door shelf can be adjusted in height.
To do this proceed as figure.

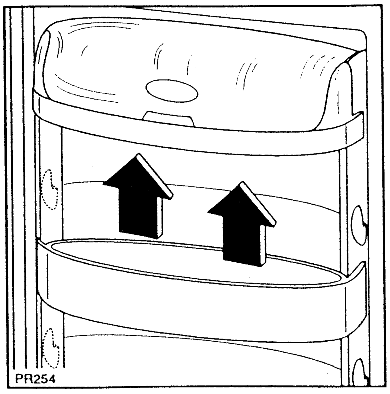

For more thorough cleaning, the top door shelf and the bottle shelf can be removed by pulling them in the directon of the arrows, then refitting them in position.

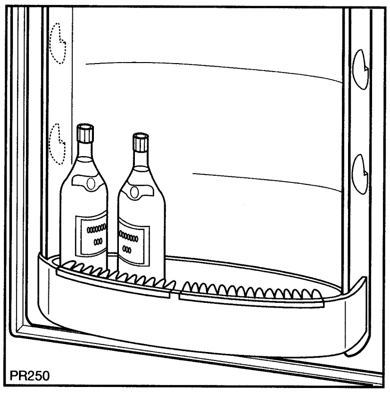

Health and Safety Guidelines

Because of consumer demand, preservatives have been removed from many pre-prepared foods. This together with the changes in shopping habits to a once-a-week shop, mean that safe handling and storage of food is even more important than ever.

The following tips should help you to ensure that the food in your home is in as perfect condition as possible.

- Keep the time between buying chilled food and placing it in your fridge as short as possible. Tests showed that the temperature of 1 litre of orange juice rose to 22°C in an hour between the supermarket and home. It then took 11 hours to get down to 7°C in the refrigerator.
- Keep the refrigerator door closed as much as possible.
- Do not push food together too much, try to allow air to circulate around each item.
- Cool cooked food as quickly as possible but do NOT place in the refrigerator until cool. (Leave food in a cool place in order that it can then be placed in the refrigerator as soon as possible).
- Do NOT mix raw and cooked meat, they must be in separate containers. Take care not to let the meat juices drip onto other food. If the meat does drip, remove everything and clean thoroughly.
- Do not store food uncovered.
- Remove suspect food from your refrigerator and clean the interior (see "Maintenance and Cleaning").
- Never allow spillages to dry and harden.
- Store eggs in the egg rack provided in the refrigerator door. Discard any broken or chipped eggs.
- Regularly check the refrigerator door seal to ensure that it is clean and free from debris.
- Always wash your hands with soapy water and dry them with a clean towel before handling food.
- Keep work surfaces clean and avoid cross contamination by not using the same work surface or knife, without washing them thoroughly in between.

Defrosting

The refrigerator automatically defrost every time the compressor stops. The water is discharged, via the pipe, into a tray located at the back of the appliance above the compressor, where it evaporates.

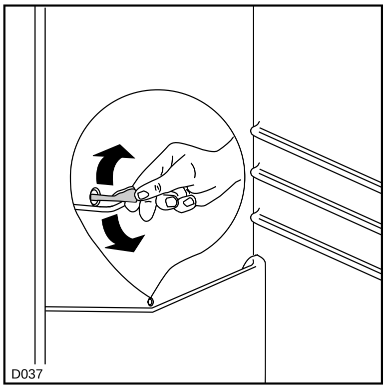

Important

To avoid defrost water overflowing into the fridge, periodically clean the water discharge hole in the centre of the V shaped drip collector at the back of the refrigerator compartment behind the fruit and vegetable drawers. Use the special cleaner provided which you will find already inserted into the discharge hole.

Normal Operating Sounds

You may hear faint gurgling or bubbling sounds when the refrigerant is pumped through the coils or tubing at the rear, to the cooling evaporator.

When the compressor is on, the refrigerant is being pumped round, and you will hear a whirring sound or pulsating noise from the compressor.

A thermostat controls the compressor, and you will hear a faint ‘click’ when the thermostat cuts in and out.

Maintenance and Cleaning

Before any maintenance or cleaning work is carried out, DISCONNECT the appliance from the ELECTRICITY supply.

Internal cleaning

Clean the inside and accessories with warm water and bicarbonate of soda (5ml to 0.5 litre of water). Rinse and dry thoroughly.
NEVER USE DETERGENTS, ABRASIVE POWDERS, HIGHLY PERFUMED CLEANING PRODUCTS OR WAX POLISHES, TO CLEAN THE INTERIOR AS THESE WILL DAMAGE THE SURFACE AND LEAVE A STRONG SMELL.

Clean the drain hole of the water trough at regular intervals and make sure that the drain hole is never obstructed, so that the defrost water may flow freely.

Changing the light bulb

Should the interior light fail to work, first switch off the appliance and disconnect from the electricity supply, then replace the bulb as follows, see figure.
Unscrew the light cover and then pull it outward toward the middle of the cabinet. Unscrew the bulb and replace it with a new 15 watt bulb (available from your nearest Electrolux Service Centre).

Replace the light cover by sliding it into its original position and replacing the screw.

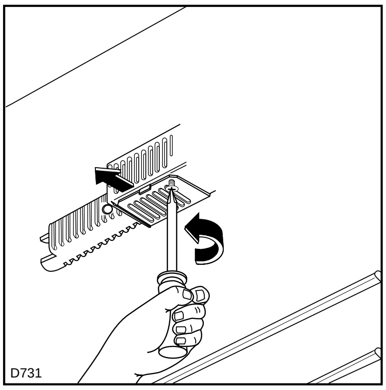

When the appliance is not in use

When the appliance is not in use for long periods, disconnect from the electricity supply, empty all foods and clean the appliance, leaving the door ajar to prevent unpleasant smells.

Something not Working?

Before contacting your local Service Force Centre check the following points.

Symptom	Solution
No power to appliance	- Check there is power at the socket. - Check there is not a power cut by checking the household lights. - Check the fuse has not blown.
The light does not come on	- Ensure that the bulb is correctly fitted. - Replace the bulb if it has blown. - Check the door light switch is not jammed.
The temperature in the fridge is too high	- Check the ambient temperature is within the appliances operating limits of 10˚C to 32˚C. Relocate the appliance if necessary. - Check the thermostat is turned to the correct setting relative to ambient conditions.
The compressor runs continuously	- Adjust the thermostat to give correct temperature control. See page 5. - Check that the door is closed. - Large quantities of food have recently been placed in the cabinet/and or door is frequently opened. - Check that air ventilation is not obstructed.
Excessive frost and ice has built up	- Ensure the door is not left open. - Check that nothing is preventing the door from closing. - Is the door gasket intact and clean.
Noise	- Refer to normal operating sounds.
Water under the salad bin	- Check the drain hole is not blocked (see “Maintenance and Cleaning”).

If after the above checks, there is still a fault, call your local Service Force Centre.

In-guarantee customers should ensure that the above checks have been made as the engineer will make a charge if the fault is not a mechanical or electrical breakdown.

Please note that proof of purchase is required for any in-guarantee service calls.

Service and Spare Parts

In the event of your appliance requiring service, or if you wish to purchase spare parts please contact your local Electrolux Service Force Centre by telephoning:

0870 5 929929

Your telephone call will be automatically routed to the Service Centre covering your post code area. The addresses are listed on the following pages.

Before calling out an engineer, please ensure you have read the details under the heading “Something Not Working” and have the model number and purchase date to hand.

Please note that it will be necessary to provide proof of purchase for any in-guarantee service calls. In-guarantee customers should ensure that the checks under the heading “Something Not Working” have been made as the engineer will make a charge if the fault is not a mechanical or electrical breakdown.

Customer Care Department

For general enquiries concerning your Electrolux appliance or for further information on Electrolux products please contact our Customer Care Department by letter or telephone as follows:

Customer Care Department
Electrolux
Newbury
Berkshire
RG14 5XL

Tel: 01635 522 799

Guarantee Conditions

Standard guarantee conditions

We, Electrolux, undertake that if within 12 months of the date of purchase this Electrolux appliance or any part thereof is proved to be defective by reason only of faulty workmanship or materials, we will, at our option repair or replace the same FREE OF CHARGE for labour, materials or carriage on condition that:

- The appliance has been correctly installed and used only on the electricity supply stated on the rating plate.
- The appliance has been used for normal domestic purposes only, and in accordance with the manufactuer's instructions.
- The appliance has not been serviced, maintained repaired, taken apart or tampered with by any person not authoried by us.
- All service work under this guarantee must be undertaken by an Electrolux Service Force Centre.
- Any appliance or defective part replaced shall become the Company's property.
- This guarantee is in addition to your statutory and other legal rights.

Home visits are made between **8.30am** and **5.30pm** Monday to Friday. Visits may be available outside these hours in which case a **premium** will be charged.

Exclusions

This guarantee does not cover:

- Damage or calls resulting from transportation, improper use or neglect, the replacement of any light bulbs or removable parts of glass or plastic.
- Costs incurred for calls to put right an appliance which is improperly installed or calls to appliances outside the United Kingdom.
- Appliances found to be in use within a commercial environment, plus those which are subject to rental agreements.
- Products of Electrolux manufacture which are not marketed by Electrolux.

European Guarantee

If you should move to another country within Europe then your guarantee moves with you to your new home subject to the following qualifications:

- The guarantee starts from the date you first purchased your product.
- The guarantee is for the same period and to the same extent for labour and parts as exists in the new country of use for this brand or range of products.
- This guarantee relates to you and cannot be transferred to another user.
- Your new home is within European Community (EC) or European Free Trade Area.
- The product is installed and used in accordance with our instructions and is only used domestically, i.e. a normal household.
- The product is installed taking into account regulations in your new country.

Before you move please contact your nearest Customer Care centre, listed below, to give them details of your new home. They will then ensure that the local Service Organisation is aware of your move and able to look after you and your appliance.

France	Senlis	+33 (0) 44 62 22 22
Germany	Nurenberg	+49 (0) 911 323 2600
Italy	Pordenone	+39 (0) 1678 47053
Sweden	Stockholm	+46 (0) 20 78 77 50
UK	Newbury	+44 (0) 1635 522 799

ELECTROLUX SERVICE FORCE

To contact your local Electrolux Service Force Centre telephone 0870 5 929929

CHANNEL ISLANDS

GUERNSEY	Guernsey Electricity PO Box 4 Vale , Guernsey Channel Islands
JERSEY	Jersey Electricity Company PO Box 45 Queens Road St Helier Jersey Channel Islands JE4 8NY

SCOTLAND

ABERDEEN (M05)	8 Cornhill Arcade Cornhill Drive Aberdeen AB2 5UT
AUCHTERMUCHY (M03)	33A Burnside Auchtermuchy Fife KY14 7AJ
BLANTYRE (M07)	Unit 5 Block 2 Auchenraith Ind Estate Rosendale Way Blantyre G72 0NJ
DUMFRIES (M01)	93 Irish Street Dumfries Scotland DG1 2PQ
DUNOON (M67)	Briar Hill 7 Hill Street, Dunoon Argyll PA23 7AL
GLASGOW (M04)	20 Cunningham Road Clyde Estate Rutherglen, Glasgow, G73 1PP
INVERNESS (M06)	Unit 3B Smithton Indust. Est. Smithton Inverness IV1 AJ
ISLE OF ARRAN (OWN SALES)	Arran Domestics Unit 4 The Douglas Centre Brodick Isle of Arran KA27 8AJ
ISLE OF BARRA (OWN SALES)	J Zerfah 244 Bruernish Isle of Barra Western Islands HS9 5QY
ISLE OF BUTE (M66)	Walker Engineering Glenmhor Upper Serpentine Road Rothesay Isle of Bute PA20 9EH
ISLE OF LEWIS (M69)	ND Macleod 16 James Street Stornoway Isle of Lewis PA87 2QW
KELSO (M08)	2-8 Wood Market Kelso Borders TD5 7AX
ORKNEY (M65)	Corsie Domestics 7 King Street Kirkwall Orkney KW15
PERTH	Hydro Electric Inveralmond House Ruthervenfield Road Perth PH1 3AQ
PERTH (OWN SALES)	Graham Begg Unit 4 Airport Industrial Estate Wick KW1 4QS
SHETLAND (OWN SALES)	Tait Electronic Systems Ltd. Holmsgarth Road Lerwick Shetland ZE1 0PW
SHETLAND (OWN SALES)	Bolts Shetland Ltd 26 North Road Lerwick Shetland ZE1 0PE
WHALSAY (OWN SALES)	Leask Electrical Harlsdale Symbister, Whalsay Shetland ZE2 9AA

NORTHERN IRELAND

BELFAST (M27)	Owenmore House Kilwee Industrial Estate Upper Dunmury Lane Belfast BT17 0HD

WALES

CARDIFF (M28)	Guardian Industrial Estate Clydesmuir Road Tremorfa, Cardiff CF2 2QS
CLYWD (M14)	Unit 6-7 Coed - Parc Abergele Road Rhuddlan Clwyd Wales LL18 5UG
OSWESTRY (M17)	Plas Funnon Warehouse Middleton Road Oswestry SY11 2PP
HAVERFORDWEST (M75)	Cromlech Lodge Amerlston Haverfordwest SA62 5DS
DYFED (M77)	Maes Y Coen High Mead Lianybydder Dyfed SA40 9UL

NORTH EAST

GATESHEAD (M39)	Unit 356a Dukesway Court Dukesway Team Valley Gateshead NE11 0BH
GRIMSBY (M42)	15 Hainton Avenue Grimsby South Humberside DN32 9AS
HULL (M41)	Unit 1 Boulevard Industrial Estate Hull HU3 4AY
LEEDS (M37)	64-66 Cross Gates Road Leeds LS15 7NN
NEWTON AYCLIFFE (M45)	Unit 16 Gurney Way Aycliffe Ind Estate Newton Aycliffe DL5 6UJ
SHEFFIELD (M38)	Pennine House Roman Ridge Ind. Roman Ridge Road Sheffield S9 1GB

NORTH WEST

BIRKENHEAD (M11)	1 Kelvin Park Dock Road Birkenhead L41 1LT
CARLISLE (M10)	Unit 7 James Street Workshops James Street Carlisle Cumbria CA2 5AH
ISLE OF MAN (M64)	South Quay Ind Estate Douglas Isle of Man
LIVERPOOL (M15)	Unit 1 Honeys Green Precinct Honeys Green Lane Liverpool L12 9JH
MANCHESTER (M09)	Unit B Central Industrial Estate St Marks Street Bolton BL3 6NR
PRESTON (M13)	Unit 250 Dawson Place Walton Summit Bamber Bridge Preston Lancashire PR5 8AL
STOCKPORT (M16)	Unit 20 Haigh Park Haigh Avenue Stockport SK4 1QR

ELECTROLUX SERVICE FORCE

To contact your local Electrolux Service Force Centre telephone 0870 5 929929

MIDLANDS

BIRMINGHAM (M18)	66 Birch Road East, Wyrley Road Industrial Estate Witton Birmingham B6 7DB
BOURNE (M44)	Manning Road Ind Estate Pinfold Road Bourne PE10 9HT
BRIDGNORTH (M72)	1 Underhill Street Bridgnorth Salop WV16 4BB
GLOUCESTER (M23)	101 Rycroft Street Gloucester GL1 4NB
HEREFORD (M31)	Unit 3 Bank Buildings Cattle Market Hereford HE4 9HX
HIGHAM FERRERS (M51)	30 High Street Higham Ferrers Northants NN10 8BB
ILKESTON (M43)	Unit 2 Furnace Road Ilkeston DE7 5EP
LEICESTER (M22)	Unit 7 Oaks Industrial Estate Coventry Road Narborough Leicestershire LE0 5GF
LINCOLN (M40)	Unit 8 Stonefield Park Clifton Street Lincoln LN5 8AA
NEWCASTLE UNDER LYME (M12)	18-21 Croft Road Brampton Industrial Estate Newcastle under Lyme Staffordshire ST5 0TW
NUNEATON (M21)	19 Ptarmigan Place Townsend Drive Nuneaton CV11 6RX
REDDITCH (M20)	13 Thornhill Road North Moons Moat Redditch Worcestershire B98 9ND
TAMWORTH (M19)	Unit 3 Sterling Park Claymore Tamworth B77 5DO
WORCESTER (M73)	Unit 1 Northbrook Close Gregorys Mill Ind Estate Worcester WR3 8BP

LONDON & EAST ANGLIA

CHELMSFORD (M47)	Hanbury Road Widford Ind Estate Chelmsford Essex CM12 3AE
COLINDALE (M53)	Unit 14 Capital park Capital Way Colindale London NW9 0EQ
ENFIELD (M49)	284 Alma Road Enfield London EN3 7BB
GRAVESEND (M57)	Unit B4, Imperial Business Estate Gravesend Kent DA11 0DL
HARPENDEN (M46)	Unit 4 Riverside Estate Coldharbour Lane Harpenden AL5 4UN
LETCHWORTH (M50)	16-17 Woodside Ind Est. Works Road Letchworth Herts SG6 1LA
LONDON (M76)	2/4 Royal Lane Yiewsley West Drayton Middlesex UB7 8DL
MAIDENHEAD (M60)	Reform Road Maidenhead Berkshire SL6 8BY
MOLESEY (M61)	10 Island Farm Avenue West Molesey Surrey KT8 2UZ
NEWBURY (M24)	PO Box 5627 Newbury Berkshire RG14 5GF
IPSWICH (M48)	Unit 2B Elton Park Business Centre Hadleigh Road Ipswich IP2 0DD
NORWICH (M52)	2b Trafalgar Street Norwich NR1 3HN
SUNBURY (M63)	Unit 1a The Summit Hanworth Road Hanworth Ind Estate Sunbury on Thames TW16 5D
SYDENHAM (M62)	Unit 6 Metro Centre Kangley Bridge Road Sydenham SE26

SOUTH EAST

ASHFORD (M58)	Unit 2 Bridge Road Business Estate Bridge Road Ashford Kent TN2 1BB
FLEET (M59)	Unit 1 Redfields Industrial Estate Church Crookham Fleet Hampshire GU13 0RD
HAYWARDS HEATH (M55)	21-25 Bridge Road Haywards Heath Sussex RH16 1UA
TONBRIDGE (M56)	Unit 30 Deacon Trading Estate Morley Road Tonbridge Kent TN9 1RA

SOUTH WEST

BARNSTAPLE (M30)	P.O. Box 12 Barnstaple North Devon EX31 2YB
BOURNEMOUTH (M26)	63-65 Curzon Road Bournemouth Dorset BH1 4PW
BRIDGEWATER (M35)	6 Hamp Industrial Estate Bridgewater Somerset TA6 3NT
BRISTOL (M25)	11 Eldon Way Eldonwall Trading Bristol Avon BS4 3QQ
EMSWORTH (M33)	266 Main Road Southboure Emsworth PO10 8JL
ISLE OF WIGHT (M34)	Unit 8 Enterprise Court Ryde Business Park Ryde Isle of Wight PO33 1DB
NEWTON ABBOT (M29)	Unit 2 Zealley Industrial Estate Kingsteignton Newton Abbot S. Devon TQ12 3TD
PLYMOUTH (M32))	16 Faraday Mill Cattledown Plymouth PL4 0ST
REDRUTH (M36)	Unit 7D Pool Industrial Estate Wilson Way, Redruth, Cornwall TR15 3QW

Technical specifications

POWER SUPPLY VOLTAGE AND FREQUENCY	220-240 V / 50 Hz
TOTAL POWER ABSORBED	110 W
AVERAGE DAILY UNITS ELECTRICITY	0,75 kWh
GROSS CAPACITY	160 l
NET CAPACITY	158 l

Installation

Positioning

The appliance should be installed well away from sources of heat such as radiators, boilers, direct sunlight etc.; best performance is obtained with ambient temperature between +10°C and +32°C. For building-in and door reversibility, if necessary, refer to the relevant instructions in the following pages.

Electrical Connection

⚠ **WARNING:**

THIS APPLIANCE MUST BE EARTHED. The manufacturer declines any liability should this safety measure not be observed.

If the plug that is fitted to your appliance is not suitable for your socket outlet, it must be cut off and the appropriate plug fitted.

Remove the fuse from the cut off plug.
The cut off plug should then be disposed of to prevent the hazard of shocks in case it should be plugged into a 13amp socket in another part of your home.

⚠ **Important**

The wires in the mains lead are coloured in accordance with the following code:

Green and Yellow	**- Earth**
Blue	**- Neutral**
Brown	**- Live**

If you fit your own plug, the colours of the wires in the mains lead of your appliance, may not correspond with the markings identifying the terminals in your plug, proceed as follows:

Connect the Green and the Yellow (earth) wire to the terminal in the plug which is marked with the letter «E» or the earth symbol ⏚ , or colored green and yellow.

Connect the blue (neutral) wire to the terminal in the plug which is marked with the letter «N» or coloured black.

Connect the brown (live) wire to the terminal in the plug which is marked with the letter «L» or colured red.

The plug moulded onto the lead incorporates a fuse. For replacement, use a 13amp BS1362 fuse. Only ASTA or BSI approved fuses should be used.

The plug must not be used if the fuse cover/carrier is lost. The cover/carrier is indicated by the coloured insert at the base of the plug.
A replacement cover/carrier must be obtained from your local Electrolux Service Force Centre whose address is listed in the Customer Care Booklet which accompanies your instruction manual.

This appliance complies with the E.E.C. Directive No. 87/308 of 2.6.87 relative to radio interference suppression.

CE This appliance complies with the following E.E.C. Directive:

- **73/23 EEC** of 19.2.73 (Low Voltage Directive) and subsequent amendments.
- **89/336 EEC** of 3.5.89 (Electromagnetic
- Compatibility Directive) and subsequent amendments.

Please ensure that when the appliance is installed it is easily accessible for the engineer in the event of breakdown.

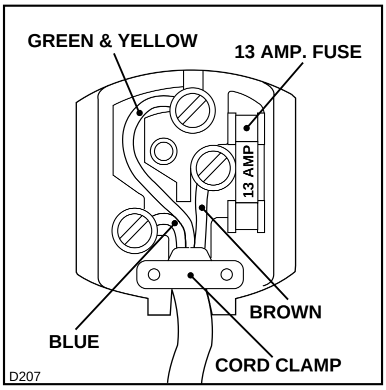

Building in

Instructions for totally built-in appliance

Dimensions of the recess

Height of housing	880 mm
Depth of housing	550 mm
Width of housing	560 mm

For appropriate venting, follow indications in the figure.

The appliance's door has been locked in position for transport by means of pins on both sides. According to the door opening direction, remove relevant pins at the top and at the bottom.

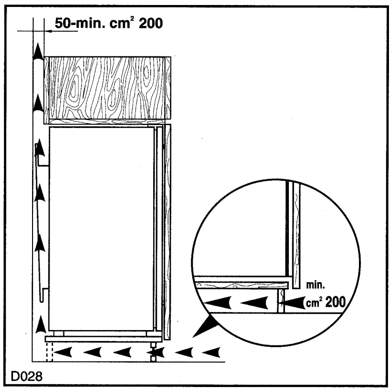

Push the appliance into the housing until stop strip (A) touches the kitchen unit.

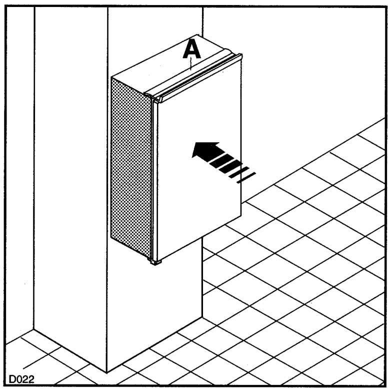

If after having carried out the operation described in section 2 there is still some space left between the appliance and the kitchen unit, fit the trimming provided together with the appliance on the stop strip (A).

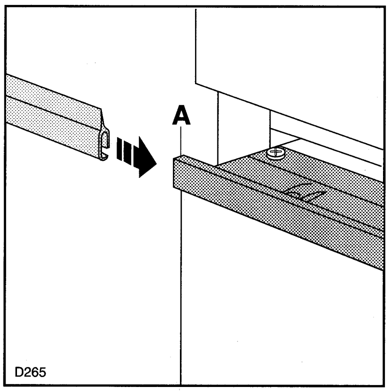

Open the door and push the appliance against the side of kitchen furniture opposite to that of appliance hinges.
Fasten the appliance with 4 screws provided in the kit included with the appliance. Snap vent grille (C) and hnge cover (D) into position.

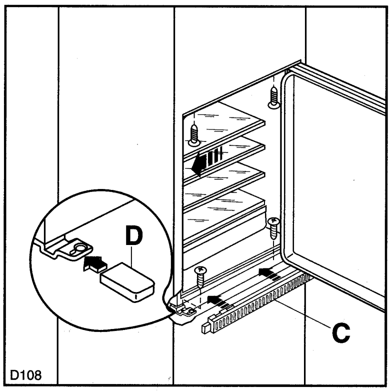

Press in the joint covers between the appliance and the kitchen furniture.

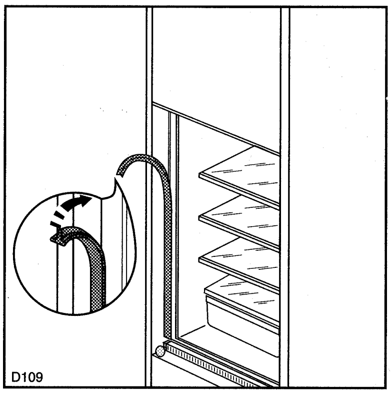

Apply covers (B) on joint cover lugs and hinge holes.

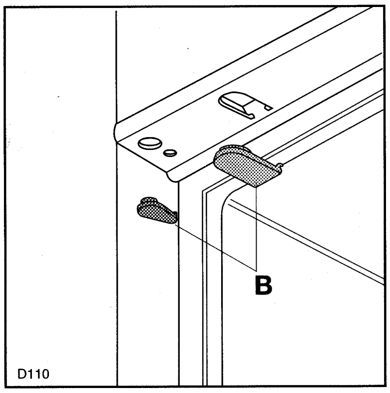

Position the runners (H) at the top and bottom of the inside of the kitchen unit as shown in the figure and mark the position of the external holes.
After preparing the holes, screw the runners to the kitchen unit door using 3,5x16 mm screws.

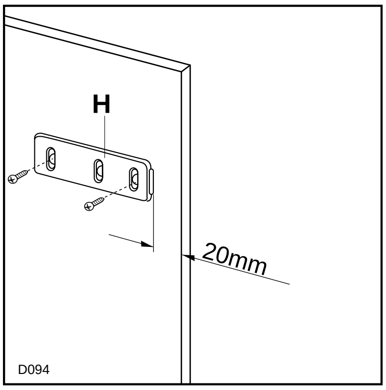

Open both the appliance door and that of the kitchen unit to approx. 90°.
Place the little plates over the runners. Hold the doors of the appliance and the unit together and mark the holes.

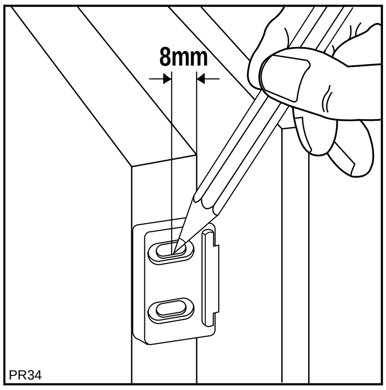
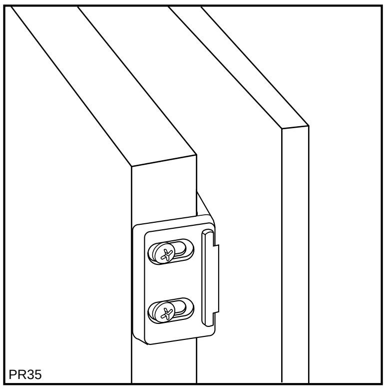
Remove the little plates and make the holes with a diam. of 2 mm. Replace the little plates over the runners and screw in the screws provided (3,5x16 mm). For the alignement of the kitchen unit door, if necessary, use the clearance size of the slotted holes. At the end of the procedure, check that the doors of the appliance and the kitchen unit open properly.